Version 6.2 Release Summary

September 2004

Overview

Version 6.2 introduces significant new features and enhancements. This release summary will briefly review the new features and changes to Prospector. Choose What's New from the Help menu for a more thorough introduction to the new features, changes and software corrections included in this release. The on-line help for Prospector fully explains how use all the features of Prospector including those new to Version 6.2.

Important News about Your Software Licenses

When you install your software, your hardware key (dongle) will automatically be updated to allow you to use the Version 6.2 release. The automatic update of the hardware key occurs during installation. This means that it is necessary that your hardware key be connected to the computer when you are updating the software. If you forget to attach the key, you can either reinstall the software or run LiveUpdate and choose the license update file:

<Install Path>\DongleUpdate62.txt

If your software is not covered by a software support contract, your hardware key will not be properly updated and you will not be able to run the new release. If you are not sure of the status of your software support or would like to check with us before loading the update, call us at **888-294-9450**.

Rough Remachining

Rough Remachining is the automatic generation of a series of related Z-Planar programs to rough the job. Each program in the series is generated based on its own parameters and the results of all previous programs in the series (where the previous programs have already machined). The combination of this information (program parameters + previous programs) determines the cutter path.

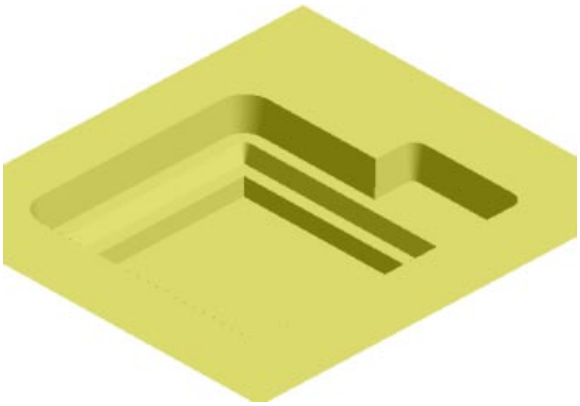

Part data to rough.

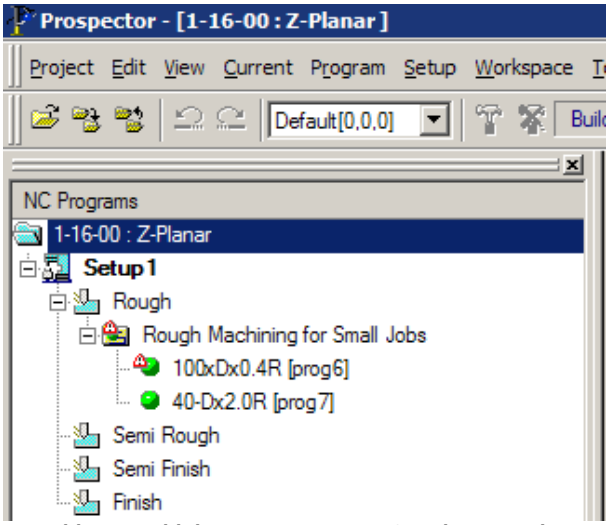

This remachining sequence uses 2 tools to rough.

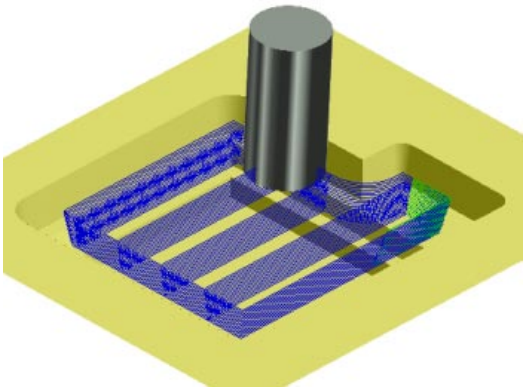

The first large roughing tool removes the stock from the bulk of the from larger pocket but is unable to machine in the smaller pockets deeper in the part.

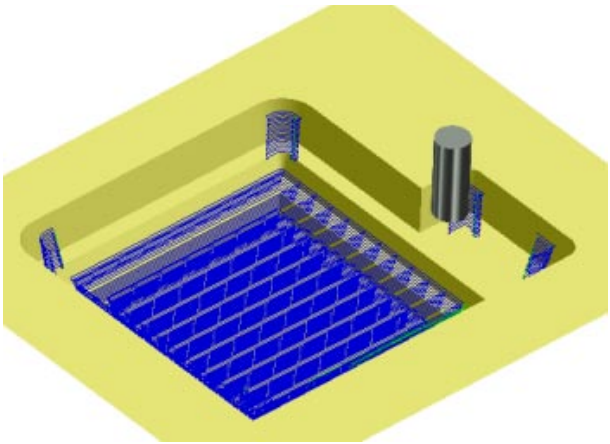

The second smaller tool removes the stock from corner areas that the larger tool left behind. It then proceeds to machine the smaller pockets where the large tool could not machine.

Note in the above example that the 2nd program is a Z-Planar With Clear but it behaves as a Z-Planar No Clear program in areas which don't need to be cleared.

Benefits of Rough Remachining

The method of determining where and how to machine produces a highly efficient set of programs to fully rough any job. This is possible because the software precisely compares the area on every level where a given tool can machine to the areas that all previous roughing programs in the series have already machined. The software then chooses only paths or portions of paths that will machine in areas that have not been machined by any of the previous programs. This methodology ensures that there is no possibility of "over-machining" the job (i.e. re-cutting in areas with smaller tool(s) that don't need to be cut).

Because rough remachining has this built-in guidance system, roughing jobs are much easier to program. You no longer need to create separate windows to constrain each tool to machine in areas with remaining stock. Furthermore you no longer need to worry about missing an area of the job. With fewer windows to create (just 1 for remachining!), fewer programs to create (just 1 per tool will be created), your programming workload is far less.

Regardless of whether a veteran or less experienced machinist programs the job, the results will be the same. The rules and standards for roughing that your shop uses for every situation gets stored in your PowerSource database. This information directs Prospector to create the proper series of programs and parameters every time so even the must junior programmers are roughing jobs the right way.

Using PowerSource Insight to Define Rough Remachining Sequences

Rough remachining begins with your PowerSource database. Using PowerSource Insight you define rough remachining sequences. A machining sequence is a series of programs that will be needed to rough a job with certain characteristics. Each program defined within a machining sequence has its own parameters, rules, tool selection criteria, feeds and speeds just like any other Z-Planar No Clear or Z-Planar With Clear program. Any number of sequences may be defined to address various situations. For example, you may choose a different series of programs and/or parameters to rough jobs with very deep cavity areas versus shallow jobs. Larger jobs would probably call for different techniques and tooling than smaller jobs. Horsepower or other restrictions of different machine tools might call for different sequences to address each machine. Roughing techniques for a certain class of tools you commonly build can be captured as a machining sequence to ensure that best practices for roughing that type of job are always used.

Creating a rough remachining sequence is very similar to defining a 2D feature-based machining sequence:

Step 1 – Start the New Machining Sequence Wizard

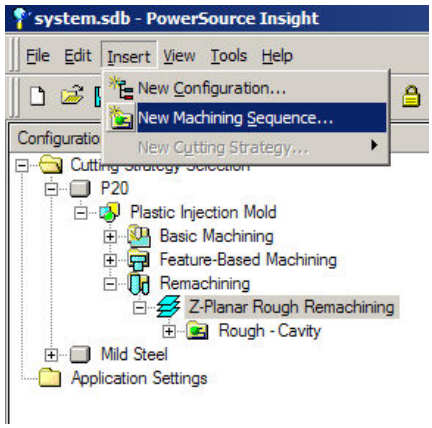

Edit the system database (.sdb). Under the configuration you wish to define a remachining sequence, open the tree to Remachining and select Z-Planar Rough Remachining. Choose New Machining Sequence… from the Insert menu to start the Add Machining Sequence Wizard.

Step 2 – Name & Describe the Sequence

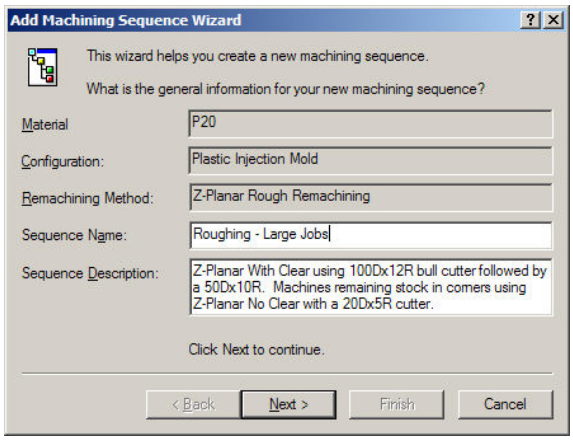

Enter the name of the sequence and a description of what this sequence does. You can use any name you wish. The description is helpful to end-users because it will be shown in the New 3D Program Wizard in Prospector when the machining sequence is chosen.

Step 3 – Add & Order Z-Planar Programs

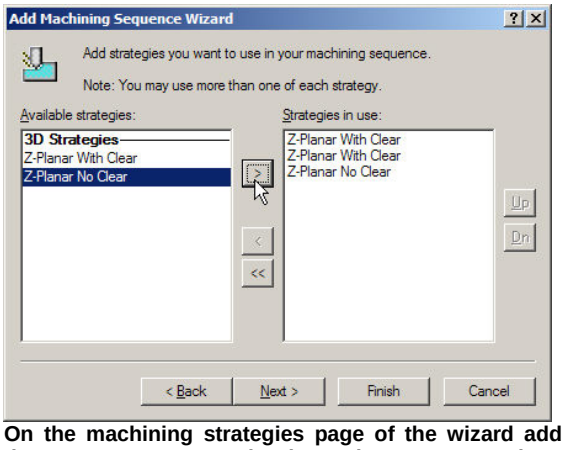

On the machining strategies page of the wizard add the programs to use in the order you want them executed. You can choose any combination of Z-Planar With Clear or Z-Planar No Clear programs to define the machining sequence.

Step 4 – Establish Rules and Settings

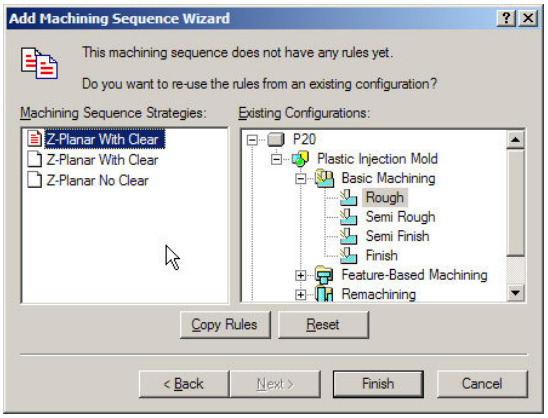

Programs added to the sequence can inherit rules and settings from the Basic Machining category. It's a good idea to inherit rules from the Rough category to "seed" each program for the sequence.

Once you have defined a machining sequence, you can fine-tune the rules and parameters for any of the programs inside the machining sequence. The procedure for establishing rules and settings is the same for programs inside a machining sequence as it is for any other program. You will probably always want to assign what tool types and size to use with each program.

Using Rough Remachining in Prospector

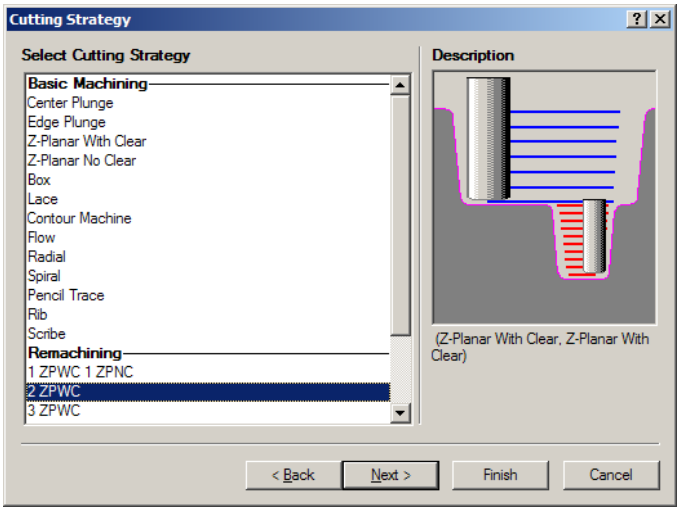

Rough remachining sequences appear in the Remachining section of the revised Cutting Strategy page of the New 3D Program wizard.

When you choose a remachining sequence, all programs are created to rough the job according to the rules and settings established for that sequence.

<u>You can click Finish now!</u>

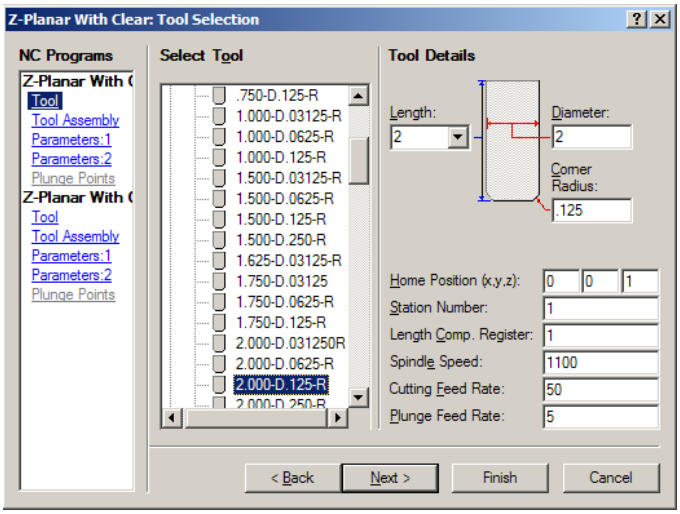

If you choose to proceed through the New 3D Program Wizard, you can visit each page for every program to review program parameters.

Any of the tools or program parameters can be changed from the default values assigned by the rules and settings established in your PowerSource database.

A handy roadmap control on the left side of each page of the wizard lets you quickly jump forward or backwards to any page.

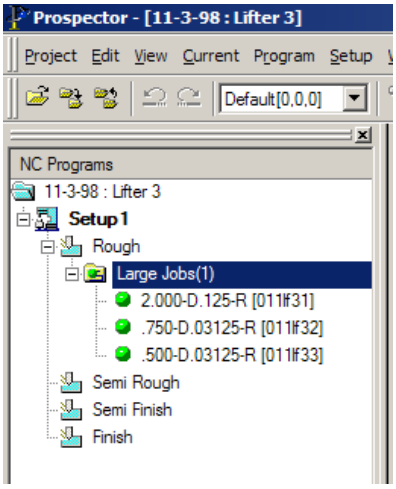

When you click Finish, the programs are added to the NC Programs tree.

Choose Project/Build to generate the roughing cutter paths.

If you wish, you can change parameters for an individual program in the sequence by choosing Program/Update.

All the programs can be updated by choosing Program/Update with the sequence selected.

New and Improved Pencil Trace Machining Strategy

The Pencil Trace machining strategy has been completely revised to:

- Automatically find the proper candidate paths. This means you no longer need to sketch the indicator lines as was required in previous versions.
- Present the candidate paths in an ordered list (longest to shortest paths) to allow you to select which paths you wish to use.
- Automatically order the direction of the paths to climb cut the part.
- Ribbing up cuts is now a true offset from the shape of the part instead of a translation in Z.
- Automatic optimal ordering of multiple curves. This means you no longer need to manually order the sequence of the curves to prevent the cutter path from jumping around.

Here are the steps to create a pencil trace program:

Step 1 – Create the Window

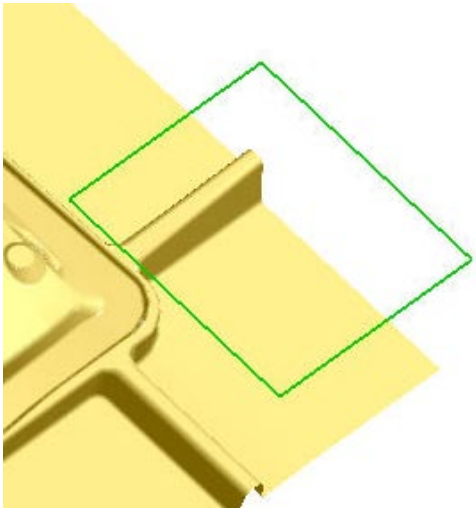

Window around the area where you wish to machine. Use only 1 window when you create a pencil trace program.

Step 2 – Choose Pencil Trace

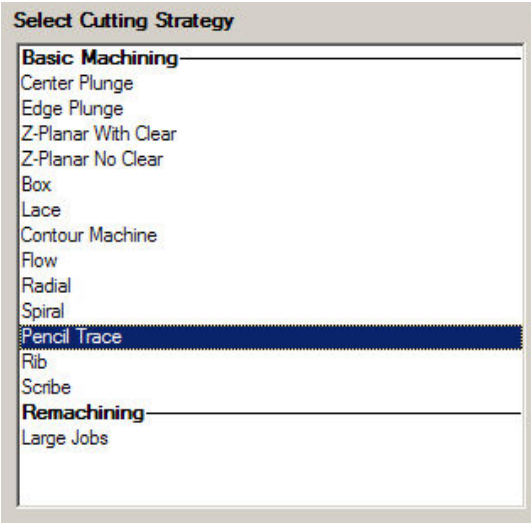

Choose Pencil Trace from the Basic Machining category of strategies on the cutting strategy page.

Step 3 – Choose a Ball Cutter

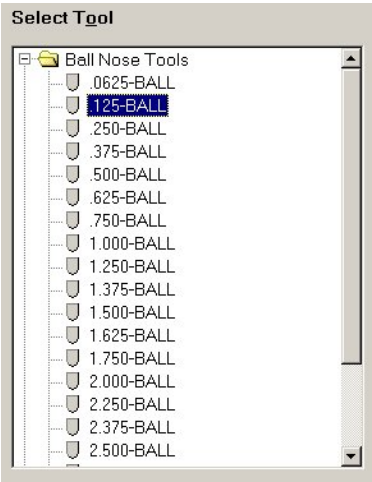

Choose the tool to use. Only ball cutters are permitted for pencil trace.

Step 4 – Create the Candidate Pencil Trace Paths

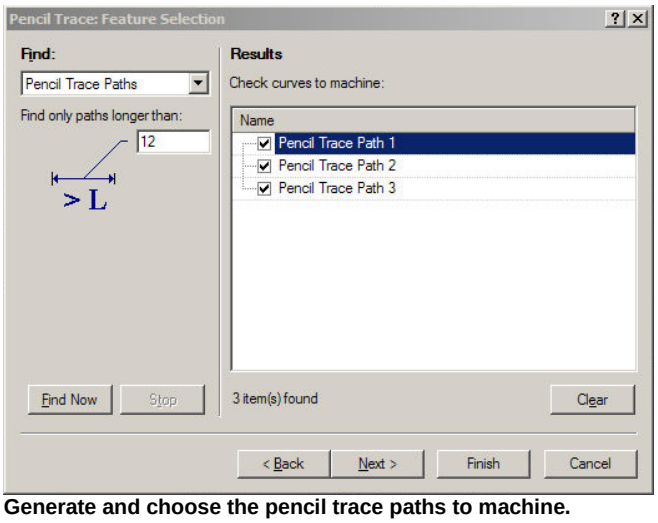

Generate and choose the pencil trace paths to machine.

Step 4 (cont.)

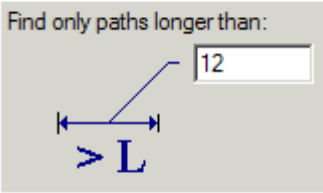

Choose Pencil Trace Paths from the Find control (the only choice).

Choose a value for the distance filter to avoid finding paths shorter than a certain length. There could be many possible candidate cuts in an area however some may be so short that you wouldn't consider cutting them. Cuts shorter than the distance you enter here will not be presented as a choice.

Click Find Now to begin the search for all possible pencil trace paths in the window. This could take several minutes depending on how large an area is to be searched, the size of the tool and tolerance. If you need to abort the search, click on Stop.

The Progress Meter will show progress towards completion of generating the candidate curves during this phase of the process:

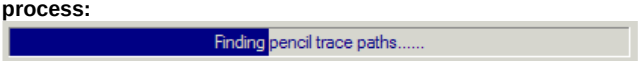

Step 4 (cont.)

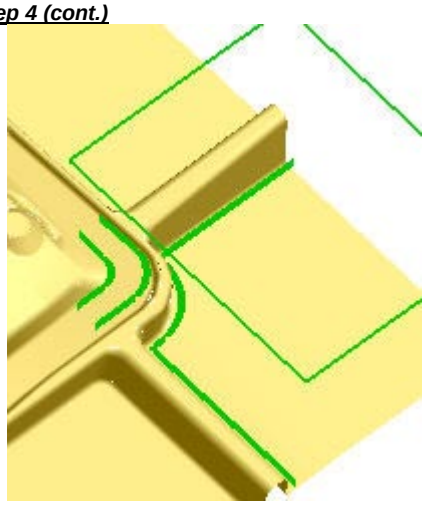

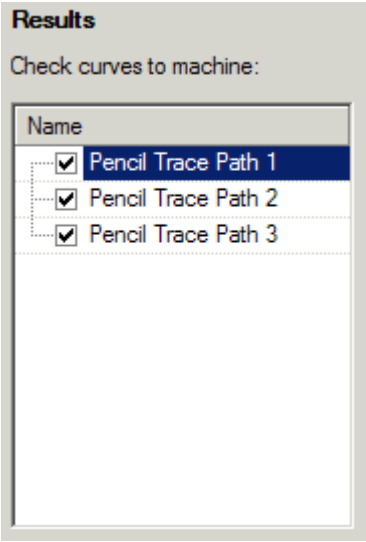

The candidate paths are shown in the 3D graphics area and in the Results list control. When a path is checked in the dialog, it will appear in a bold line style in the 3D view. Toggling the check mark in the dialog on and off for a curve makes it easy to find in the 3D view. If you don't want to machine a particular path, leave it un-checked. When you are satisfied with the collection of curves to machine, click Next

Step 5 – Set Step Down and Direction

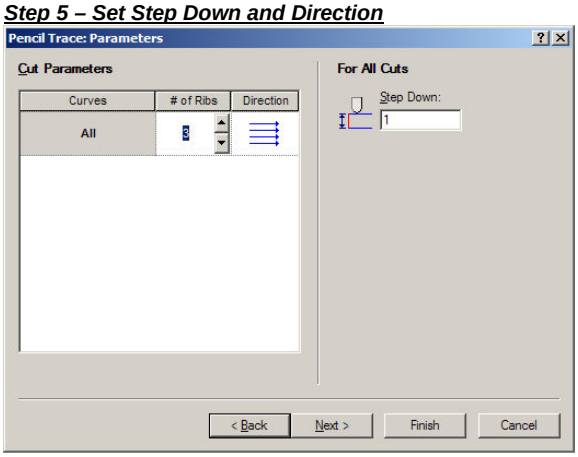

# of Ribs allows you to "rib up" a pencil trace cut by the specified Step Down value. For example, you may wish to cut a particular candidate area 3 times. The first pass will be at a level that is the stock allowance plus 3 times the step down value. After completing the first pass, the tool will lift and return to the start, feed down to the next level and start the pencil trace again. The process repeats for a third time to complete the cut then proceeds on to other cuts yet to be machined.

Setting the direction for each cut will create a zig-zag or a One-Way pencil trace programs.

More About Pencil Trace

Pencil trace always returns paths that will climb cut the part. If you find a curve that you wish to machine in a different direction, select the curve and use the reverse profile feature to change the direction of the curve(s). If you wish to conventional cut all the curves, select them all and choose reverse profile to change their direction in one step.

Prospector automatically orders the curves to be machined. The order the curves appear in the list is sorted by length but has nothing to do with the order they are cut. Prospector orders the cuts automatically in an optimal fashion. The sort will typically order the cuts in Z (from top to bottom) moving from curve to curve on each "level" in an optimal route that minimizes machine time.

Calculating the precise candidate paths for pencil trace programs can be an extremely compute-intensive operation. Here are some tips to improve performance during this phase of program creation:

> *Tip 1:* When you wish to create pencil trace paths over large areas of the job, consider doing just portions of the job at a time. If you window over the entire area, this will:
>
> - Take a much longer amount of time to compute the candidate curves.
> - Use a large amount of your computer's memory.
> - Potentially return many, many curves.
>
> It's usually more efficient to work through the job in stages using smaller windows in areas you know you want to use pencil trace.
>
> *Tip 2:* The larger the tool and stock allowance, the longer it will take to produce the curves. When a large ball cutter is needed, you'll want to use a smaller window and work the job in discrete areas as opposed to windowing a large area or the entire part.
>
> *Tip 3:* The smaller the tolerance, the longer it will take to produce the curves. Very small tolerances will require much more computer memory. Try to avoid tight tolerances where possible however if it is necessary, use smaller windows and work through the job in pieces.

More Efficient Roughing Using Zig-Zag Clearing

Removing Unnecessary Scans

Zig-Zag clearing for Z-Planar With Clear has been enhanced to remove unnecessary scans. The first cut on each level machines around the periphery of the part shape. Because this material is removed, it is not necessary to machine any linear clearing cut that stays entirely in that area. Typically this would occur in corners as shown in the example below:

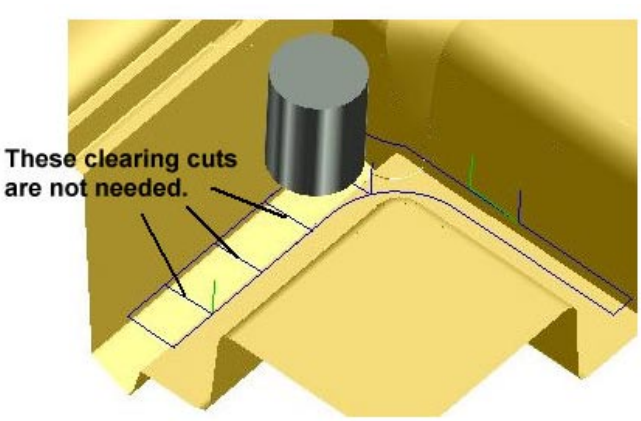

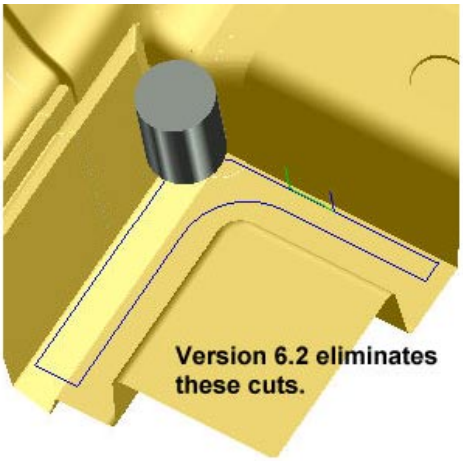

Improved Ordering of Island Cuts

The first cuts on each level will machine the periphery of the window and around all the islands. In previous releases, these island cuts where not necessarily well ordered. This could cause excessive retracing back over areas already machined to get to the next island to machine.

Before Version 6.2

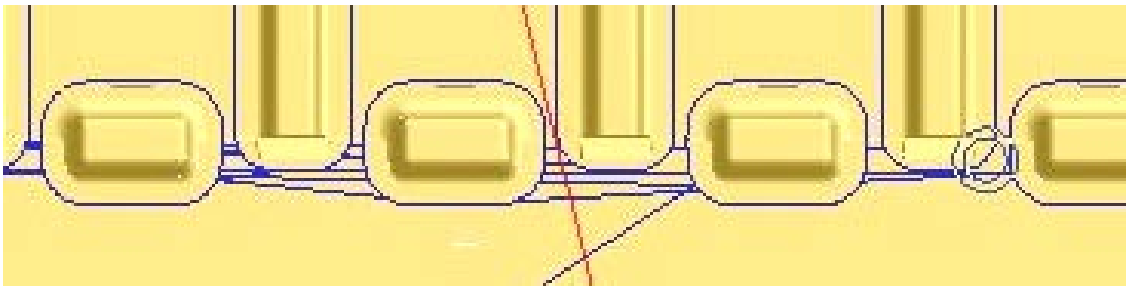

More retracing than what is needed could occur in previous versions. In the above example from Version 6.1, the cutter retraces several times to machine the islands because the order in which the islands were cut was not optimal.

Version 6.2

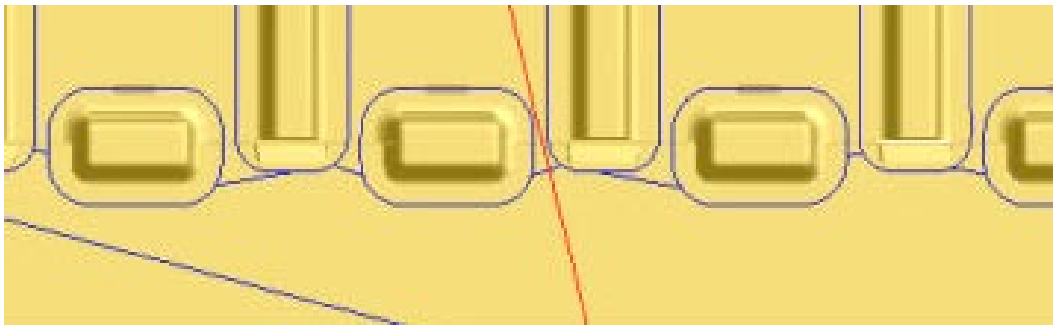

A much better ordering of the island cuts eliminates virtually all retracing. The time savings can be quite significant with this improved ordering especially when you have a large number of islands and/or levels to machine.

Improved Ordering of Clearing Scans

Just like the island cuts, the clearing cuts are grouped together in a fashion that produces a much more optimal arrangement than previous releases.

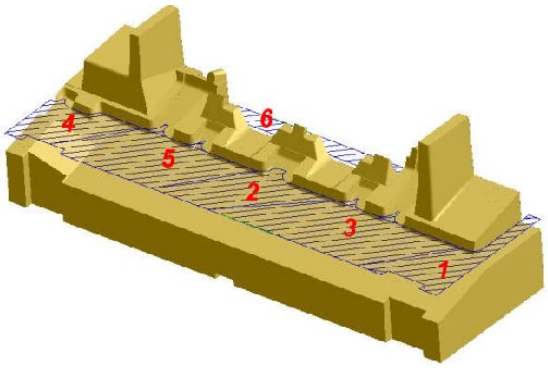

Previous versions could order the groups of clearing cuts in a haphazard fashion.

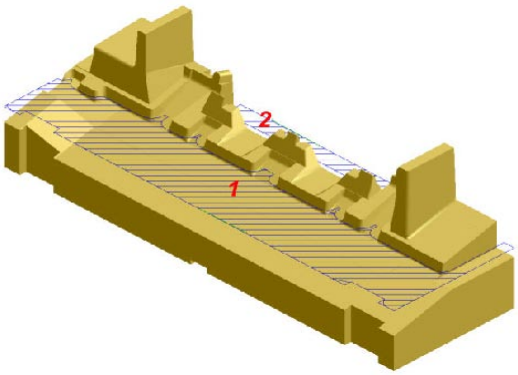

The new ordering methods in Version 6.2 creates more contiguous groups of clearing cuts and orders them in a much more optimal manner.

Using Rapid Traverse to Save Machine Time

When moving from one zig-zag scan to the next, sometimes the distance to be traveled is quite a bit longer than the step-over. In these cases, it may be to your advantage to lift, move at rapid traverse and descend back down to begin the cut. Consider this example:

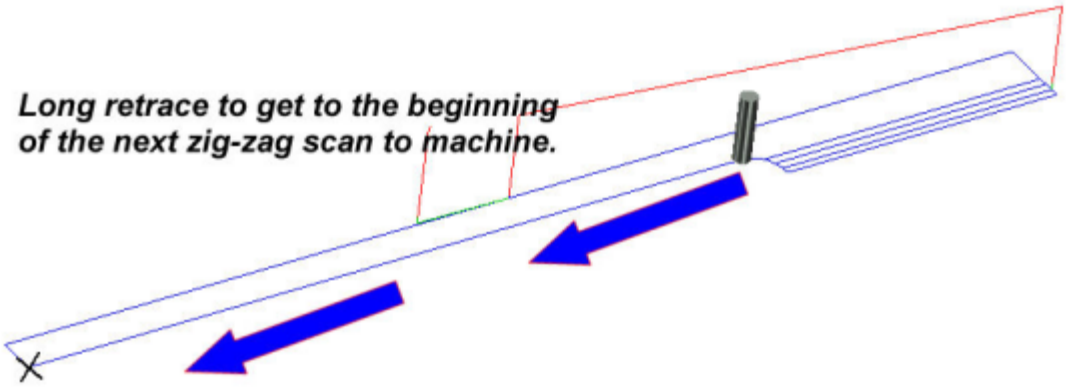

The start of the next scan for clearing is at the 'X'. A retrace along the boundary to get there can take quite a bit of time.

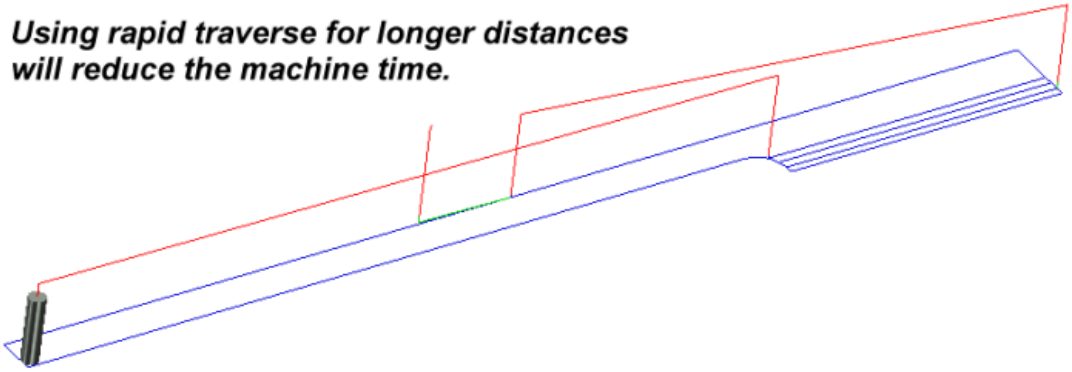

By lifting and moving at rapid traverse instead of retracing, machine time can be saved in situations like these.

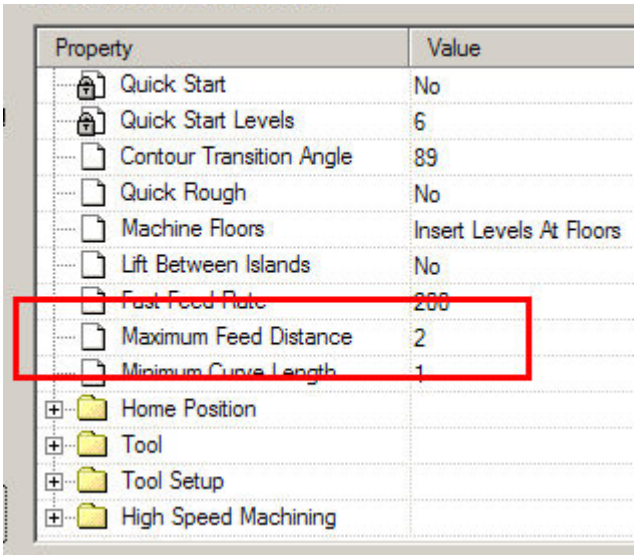

Property	Value
Quick Start	No
Quick Start Levels	6
Contour Transition Angle	89
Quick Rough	No
Machine Floors	Insert Levels At Floors
Lift Between Islands	No
Fast Feed Rate	200
Maximum Feed Distance	2
Minimum Curve Length	1
Home Position	
Tool	
Tool Setup	
High Speed Machining	

Whether or not it is more efficient to retrace or lift and rapid to the next scan primarily depends on the distance away the tool is from the start of the next scan. This distance can be specified on the Finish page of a Z-Planar With Clear. Maximum Feed Distance is the setting that selects rapid motion or cutting motion to the next scan.

In this example, if the distance to the start of the next scan is greater than 2, the cutter will lift and rapid to the next scan. If the distance is less than 2, it will cut to the next scan.

A good default value can be established based on the step-over for the tool. The default rule is to use 5-6X the step over.

Z-Planar With Clear & Pocketing Always Climb Cuts the Part

The direction of the cutter path for Z-Planar With Clear and 2D Pocketing programs has been revised to ensure that the cutter is always climb cutting the part and stock. In previous versions of Prospector, the direction of full-width cuts (the first cut on each level) would climb cut the stock so therefore in cavity conditions, this would mean that it would be conventional cutting the part.

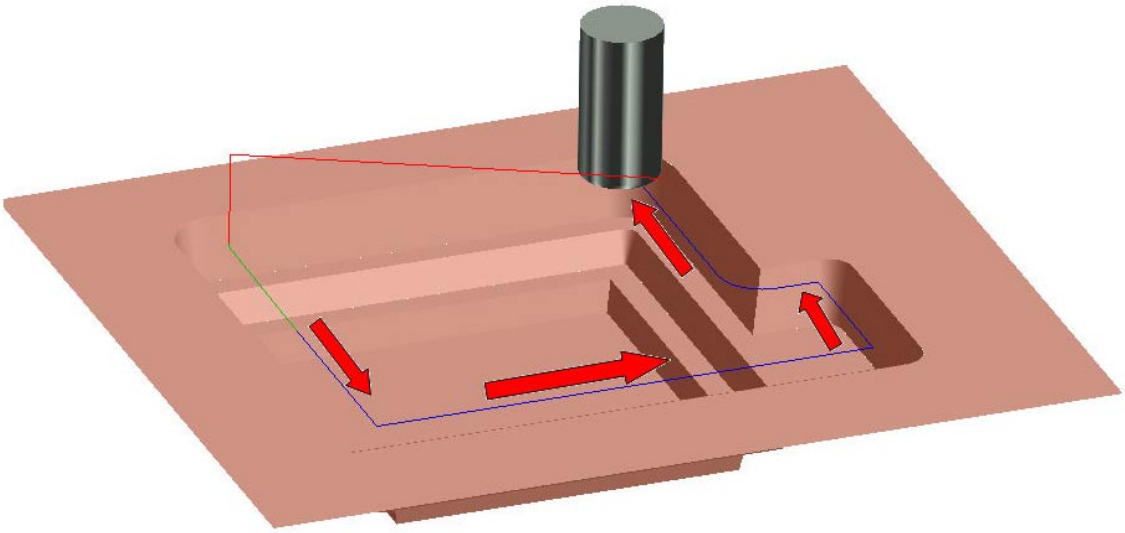

The first cut for this Z-Planar With Clear program climb cuts the part by going in a CCW direction inside the cavity.

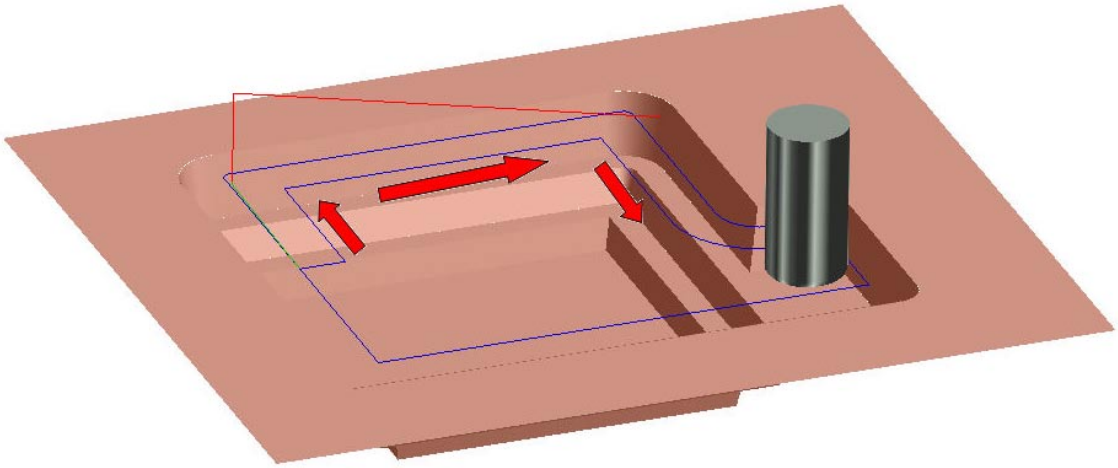

Because this example uses spiral clearing, the next cut and subsequent cuts must reverse direction of the first cut to machine in a CW direction so that the cutter is climb cutting the stock.

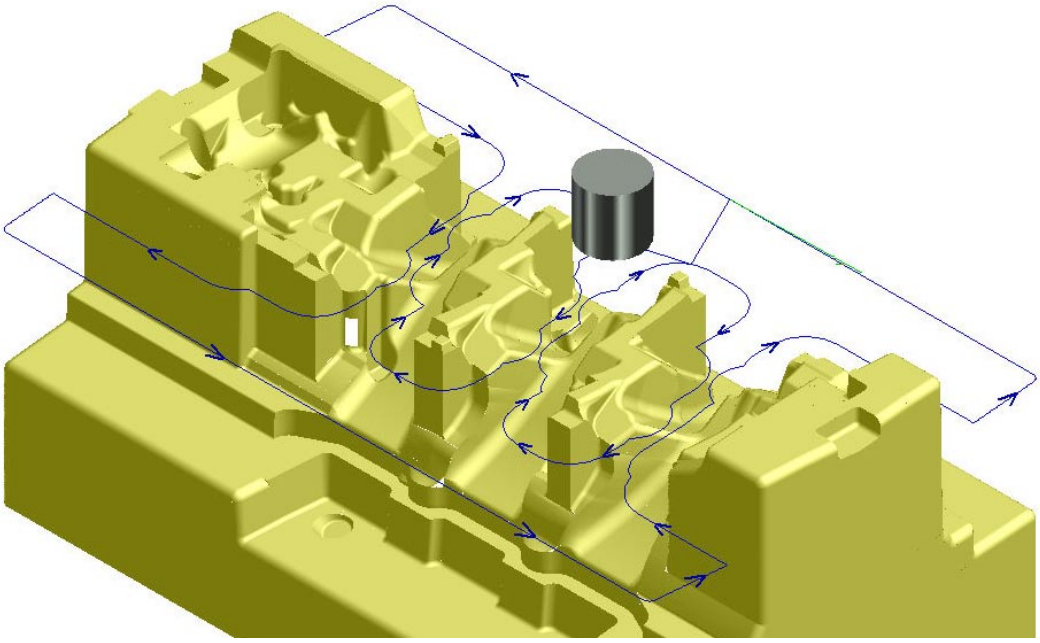

All islands on a level are always climb cut. In the zig-zag clearing example above, all the islands on this level are cut first prior to the zig-zag clearing scans. The direction of the path ensures that the tool is always climb cutting the part data.

Helical Ramping for Z-Planar With Clear and 2D Pocketing

Helical ramp has been added as a ramp option for Z-Planar With Clear and 2D Pocketing programs.

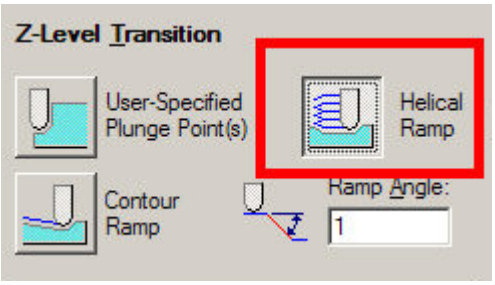

Helical Ramp is a new choice for Z-Level Transition for both Z-Planar With Clear and 2D Pocketing programs.

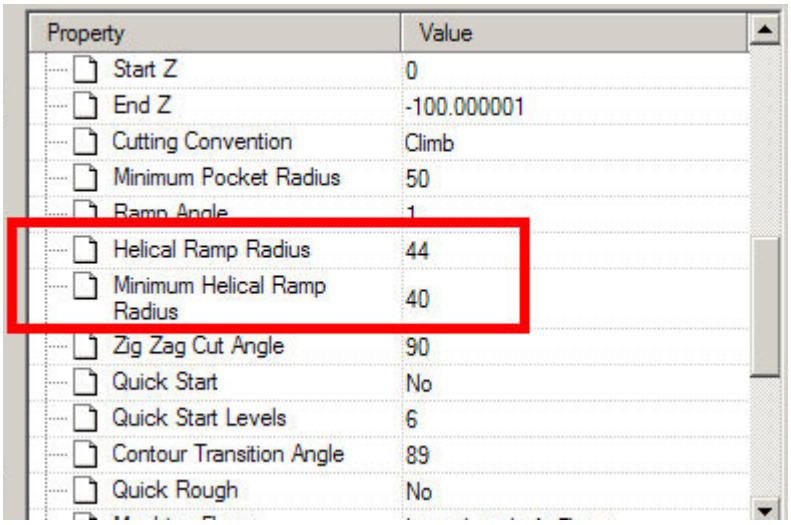

Property	Value
Start Z	0
End Z	-100.000001
Cutting Convention	Climb
Minimum Pocket Radius	50
Ramp Angle	1
Helical Ramp Radius	44
Minimum Helical Ramp Radius	40
Zig Zag Cut Angle	90
Quick Start	No
Quick Start Levels	6
Contour Transition Angle	89
Quick Rough	No

The radius of the helical ramp can be set on the Finish page of new program wizard and in your PowerSource database. The minimum radius is important to set as well to prevent the tool from bottoming out. Prospector will automatically decrease the radius of the ramp if needed to access the next level but will never go below the radius you specify as a minimum.

3D Stock Model View

In addition to the 3D and Remaining Stock Model view, the Stock Model view offers a look in 3D at an approximation of the state of the stock when you create a 3D program.

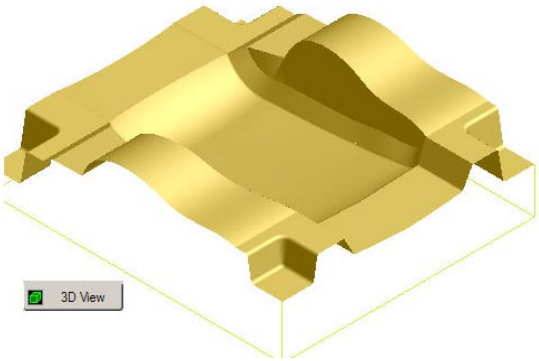

The model in the 3D view.

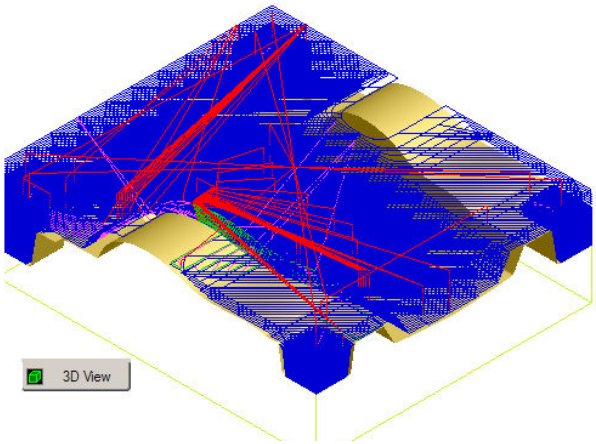

The Z-Planar With Clear programs are created to rough the job.

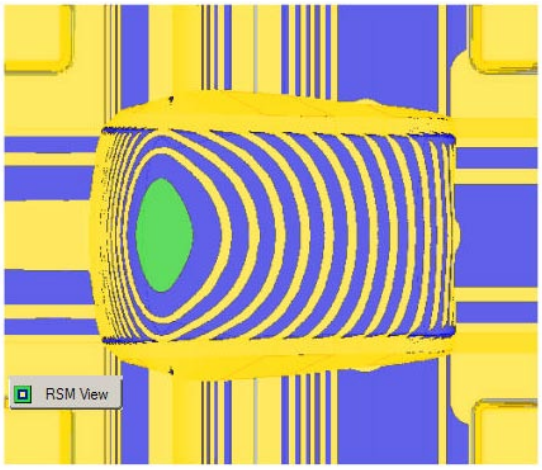

The RSM View shows the remaining stock after the roughing programs. The banded areas show the large cusps left behind. *<u>The RSM View shows you where you need to machine next.</u>*

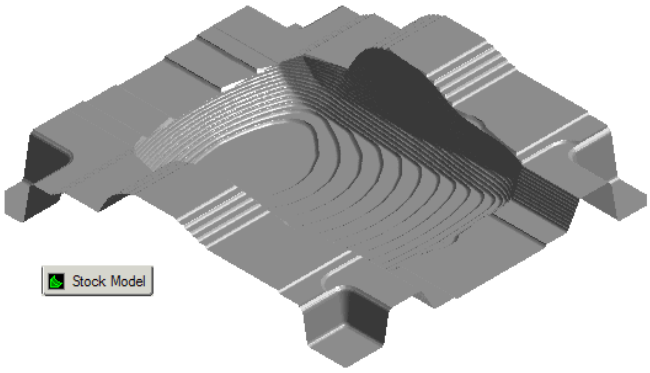

The Stock Model view provides yet another way to visualize the state of the stock. In this view, the cusps left behind by the roughing tools are easy to see. *<u>The Stock Model view shows you where you have already machined.</u>*

The stock model view is for visualization purposes only. You can not create windows or geometry, measure or display cutter path in this view. Remember that the view is a quick approximation of the stock. It is not a precise model.

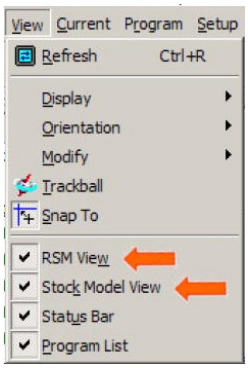

The View menu has new options to enable or disable the generation of the RSM View and/or Stock Model view.

RSM View enables/disables the display of the RSM View when creating or updating 3D programs.

Stock Model View enables/disables the display of the new Stock View when creating or updating 3D programs

Regardless of whether the RSM View is enabled or disable, the remaining stock information is always calculated by Prospector for 3D projects. Disabling the RSM view will not disable this calculation because it is needed other features in Prospector.

Creating Fillets

A new Fillet tool and has been added to the suite of profile creation tools to make it easier to develop blends.

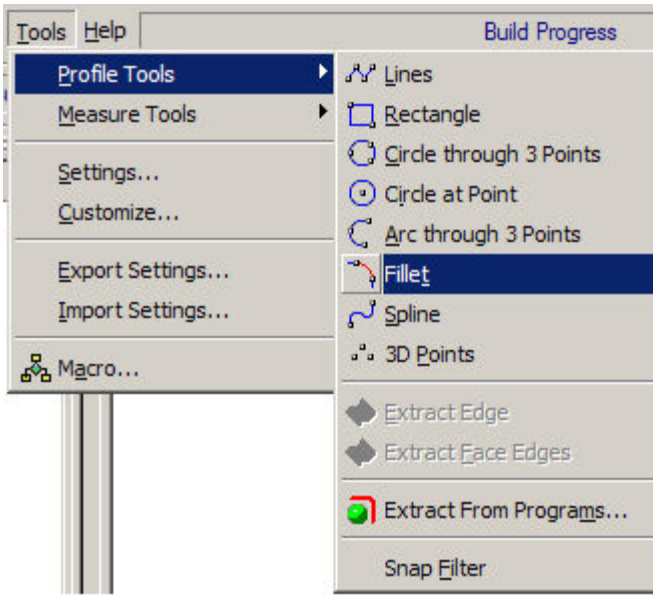

Choose Fillet to create blends.

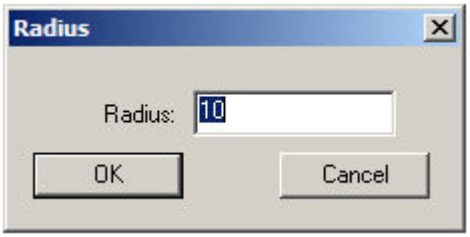

Enter the fillet radius.

Filleting Continuous Geometry

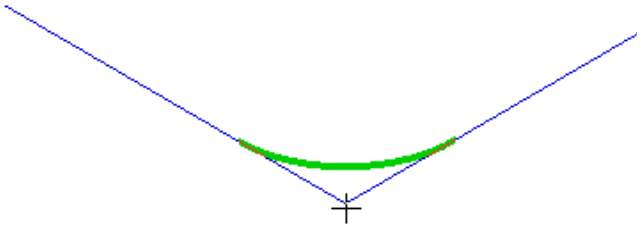

For continuous bounded geometry, moving the cursor to the candidate corner for the fillet will display a preview of the fillet.

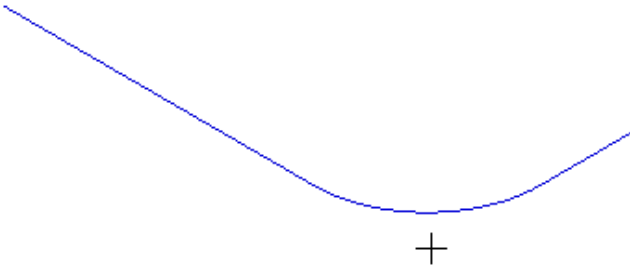

If you are satisfied with the solution, click the left mouse button to create the fillet. The fillet is inserted as part of the boundary (i.e. the fillet is not a separate arc entity).

Filleting Disjoint Geometry

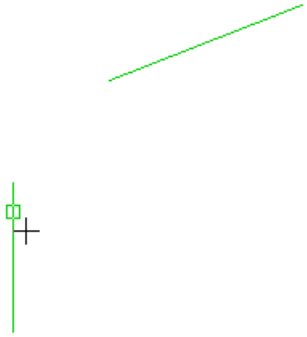

A fillet can be created between 2 disjoint pieces of geometry. Click on the first piece of geometry.

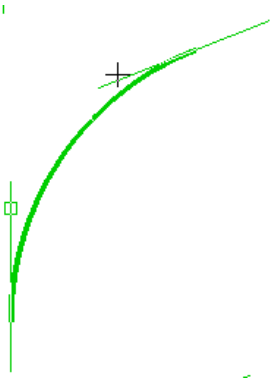

Move the cursor over the other piece of geometry. A preview of the fillet will be shown.

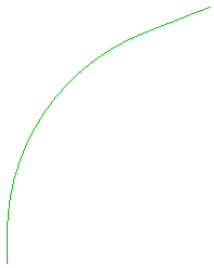

After the preview appears, click on the other piece of geometry to create the fillet. The disjoint lines are automatically joined together with the fillet to form one continuous line.

Filleting Intersecting Geometry

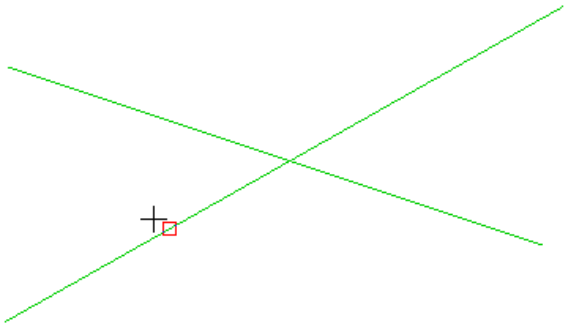

To create a fillet at the intersection of 2 or more profiles, click on the first profile to blend.

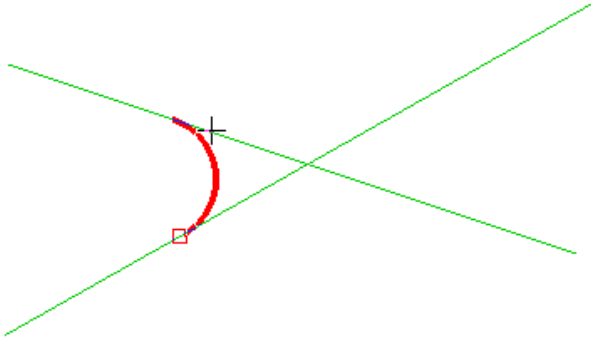

Move the cursor over the other profile to blend into the fillet. A preview picture of the fillet to be created will be shown.

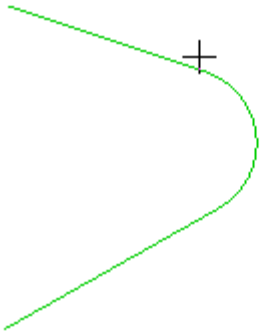

If you are satisfied with the preview, click on the 2nd profile to create the fillet. The profiles are joined together by the fillet into 1 continuous line. The unused portions of the profiles are discarded.

Changing the Fillet Radius

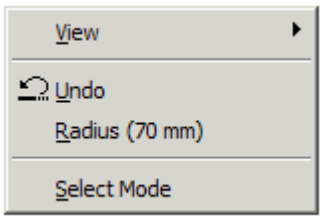

A handy mode-sensitive menu (right click) is posted when you are creating fillets to allow you to change the fillet radius without exiting fillet mode.

Fillets can be created between any combination of straight line segments, arcs and circles. Fillets can not be created between splines.

Creating Arcs Through the Last 3 Points

When using 3D Line sketch profile tool  or the Sketch Window tool  you can choose to create an arc through the last 3 points of the profile you are creating. Here's how:

Digitize points as you would normally. The last 3 points you digitize should approximate points on the arc to be created.

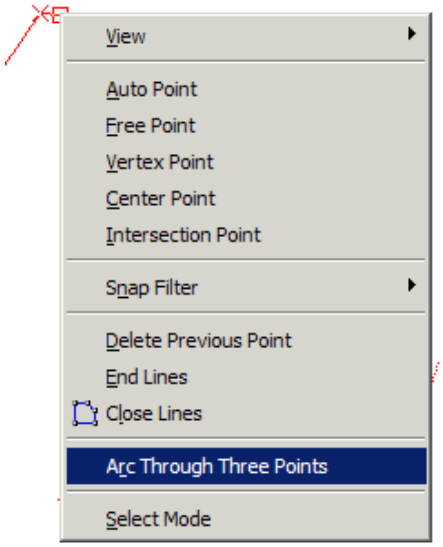

Click the right mouse button and choose Arc Through Three Points.

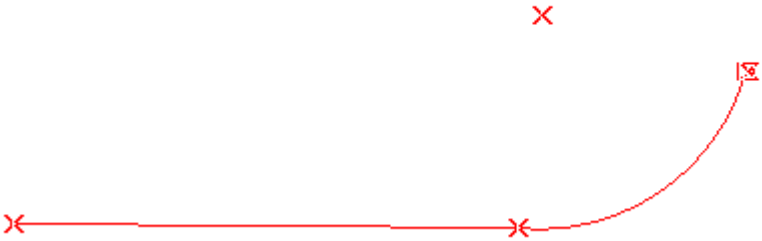

An arc is created through the last 3 points. You can keep digitizing more points if needed to complete the profile definition. The shortcut key Ctrl+3 (hold down the Ctrl key and press '3') is a predefined shortcut to create an arc from the last 3 points.

Maintenance

Scribe machining has been revised to check for collisions of the tool assembly with the stock/part. In previous versions, scribe machining programs would not check for part gouges or check the tool assembly for collisions.

When creating scribe programs, the choice of tool would not always be retained. The program would have to be updated to select the correct tool. This behavior has been corrected so that the tool selection is always retained when the program gets created the first time.

The Program Inspect feature allows imported programs from other CAM systems to be examined to determine where they gouged. Version 6.1 would not allow this feature to be used for imported programs.

2D pocketing programs created in a 3D project where the part is undersized (e.g. electrode), will honor the undersize condition for both the walls and programmed depth. In previous releases, the correct compensation was done for the walls but the depth did not take into consideration the undersize condition. This would cause too much stock to be left on the floor of the pocket.

Using the Hide/UnHide By Color feature while the New Program wizard is posted caused an application error. This has been corrected in Version 6.2.

Thread milling programs that use a helical lead angle other than 180 degrees would produce incorrect results if more than one step up in Z was required to produce the specified thread length.

2D Profiling and 3D Z-Planar No Clear programs that use a designated start point will return to the start point after the last level is complete before going to the home position. This applies to No Lift programs only.

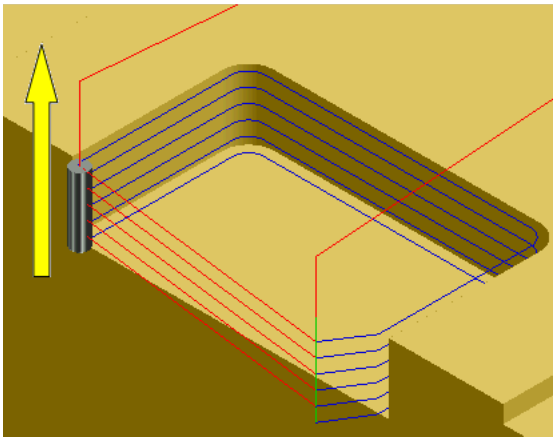

Prior versions would not return to the start point after milling the last level. The motion up in Z could result in dragging the tool against a wall damaging the inserts and/or finish on the wall.

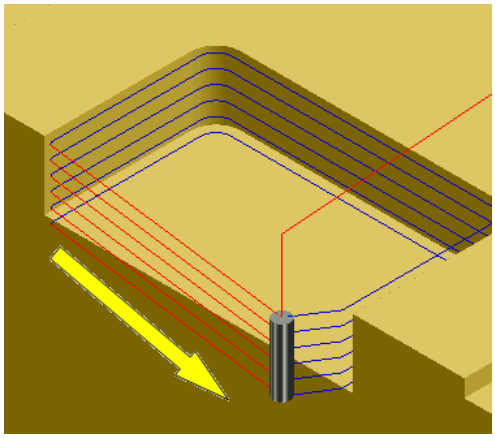

Version 6.2 returns the tool to the designated start point. This ensures that the tool is completely clear of the part before lifting to return to the home position or the next pocket or profile to machine.

Z-Planar programs using designated plunge points have been upgraded to always ensure that the return path to the plunge point will not gouge.

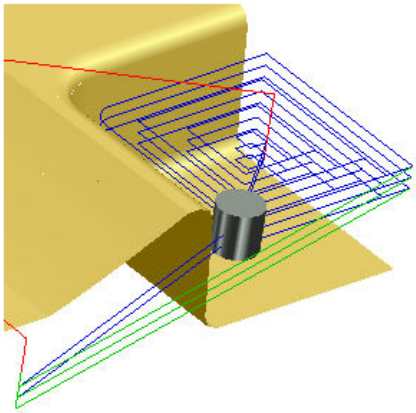

Poorly positioned plunge points like this could cause the tool to collide with the part on the return path to the plunge point in previous versions.

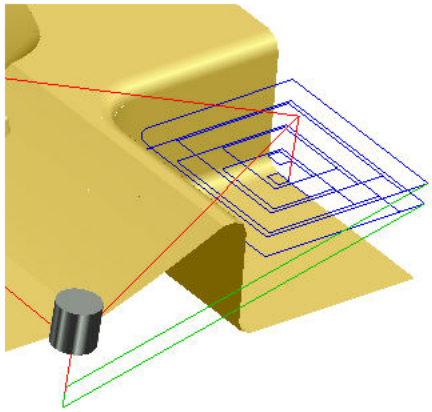

In version 6.2, if interference is detected the tool will be retracted to a safe clear plane, rapid in X/Y to the plunge point and then descend in Z to get to the next level.

When profiling or pocketing closed areas that break up into 2 or more regions because of the shape of the geometry and size of the tool, it was possible for Prospector to ignore an area. In Version 6.2, all areas will be machined if it's possible for the cutter to fit within the region:

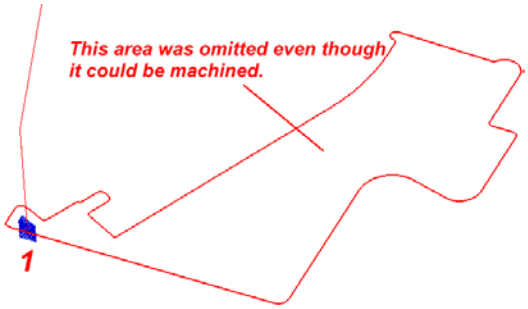

Prior versions could omit an entire area when the geometry breaks up into separate regions.

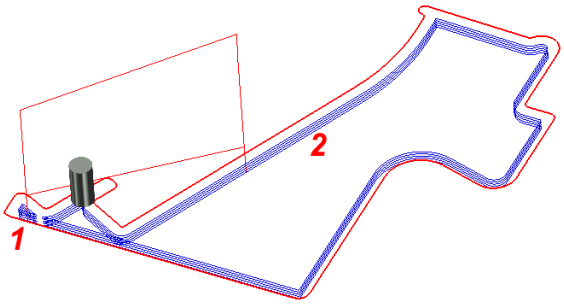

All areas which can be machined are included as part of the profiling program in Version 6.2

Shading of certain features such as surfaces of revolution could produce poor visual results. Prospector has been modified to produce a much smoother rendering of these types of surfaces to produce the proper display.

Surfaces of revolution like this could produce a very faceted display and incorrect results.

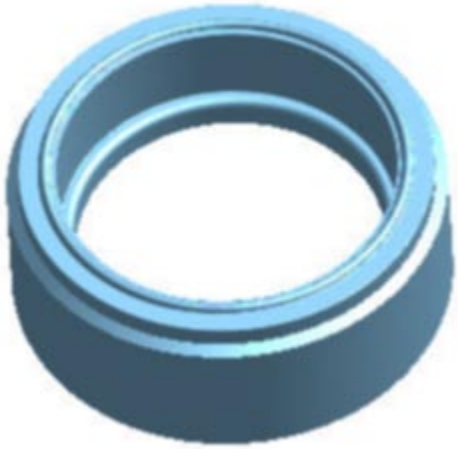

Version 6.2 corrects these problems to produce a much smoother rendering of these types of surfaces.

Customer Closed Track IDs

Track is the electronic database system that records all customer and internally generated requests for corrections and enhancements. When you report a problem or request an enhancement, our customer service representatives will input your request into the Track system and give you a Track ID number. When we complete a release, we set the status on all records in the Track database that have been addressed to closed. For a complete listing of all Track items addressed by this release, please refer to the What's New help in Prospector:

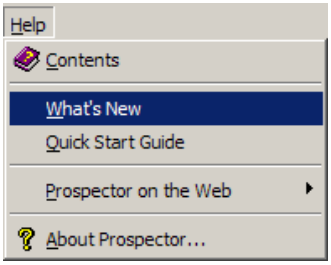

Customer Service - Version 6.2 Update Service Program

As you can see, Version 6.2 introduces many new features. Learning how to take full advantage of this new release can take a serious amount of time. This is especially true if your users are trying to figure it out on their own. Not only is learning by trial and error inefficient and sometimes frustrating, it can also lead to expensive mistakes. Why not make it easy and let our experts train your team to get the most out of this new release? Our Version 6.2 Update Program is designed to get your users up to speed fast to achieve higher levels of productivity using the new software. Your users are trained and every system is up and running the new release to your satisfaction in just one day. This means minimal interruption in your operation. The cost is **$895** (plus travel and expenses for sites outside 100 mile radius of our Troy, MI office). Don't get left behind! For more information or to schedule a service call, please call our HelpDesk at **(800) 280-0240**.

Pro/Post

This is a unique program designed to take care of your post processor requirements perfectly and best of all, permanently. Every post processor provided to you under this program is developed and tailored to your exact shop standards and requirements. The output is always *100% correct* and ready to run on the machine. Every post processor is covered with an *unlimited warranty* provided your Prospector application software is covered by a software support agreement. This means any changes you require for whatever reason are free. Starting at just $495 for a typical 3-axis mill, Pro/Post is very affordable. Speedy delivery and fast turn-around for any modifications you may require is all part of the program. To learn more or get started today, call our HelpDesk at **(800) 280-0240**.